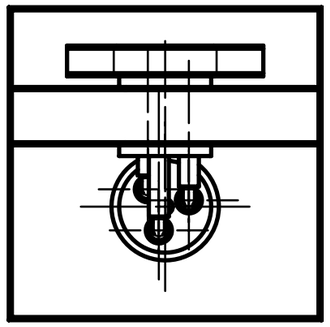

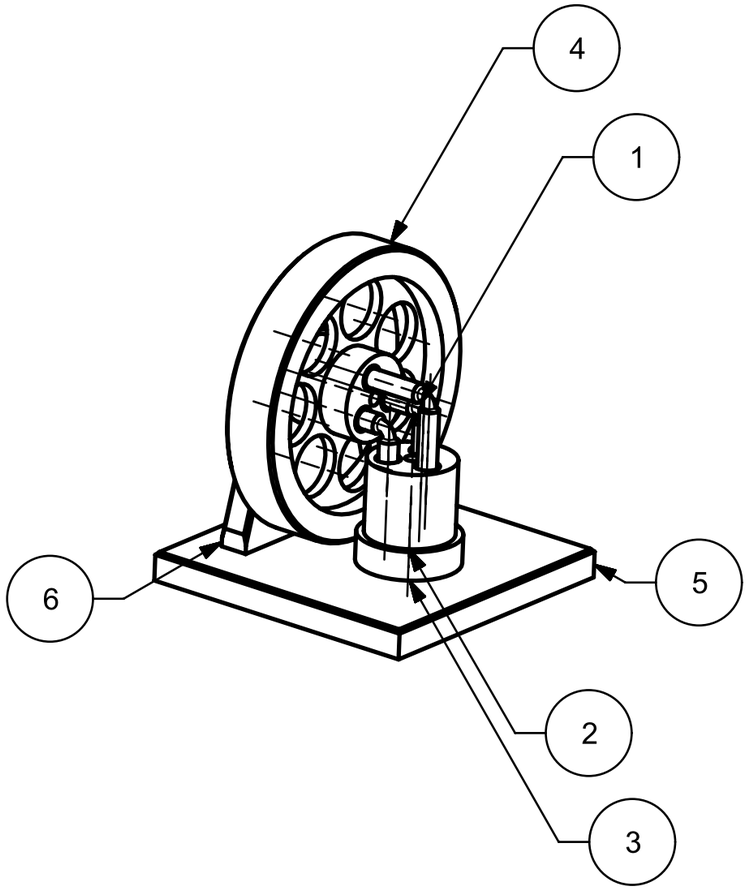

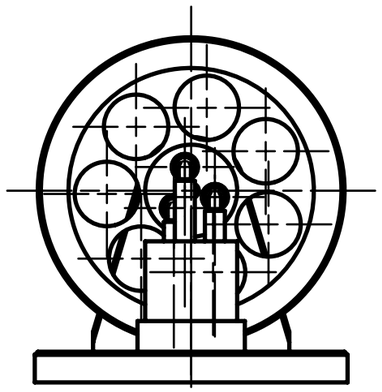

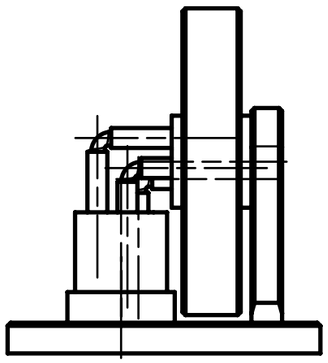

PC NO	PART NAME	QTY
6	FLYWHEEL STAND	1
5	BASE PLATE@	1
4	FLYWHEEL @	1
3	PORT BLOCK	1
2	REVOLVING CYLINDER BODY	1
1	PISTON	3

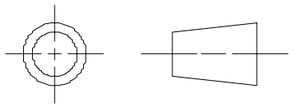

ALL DIMENSIONS IN MM

SIEMENS

THIS DRAWING HAS BEEN PRODUCED USING AN EXAMPLE TEMPLATE PROVIDED BY SIEMENS PLM SOFTWARE

FIRST ISSUED	
DRAWN BY	
CHECKED BY	
APPROVED BY	

TITLE

SIZE	DRG NO.	SHEET REV
A3	BASEPLATE _dwg1	A
SCALE 1:1		SHEET 1 OF 2

A3

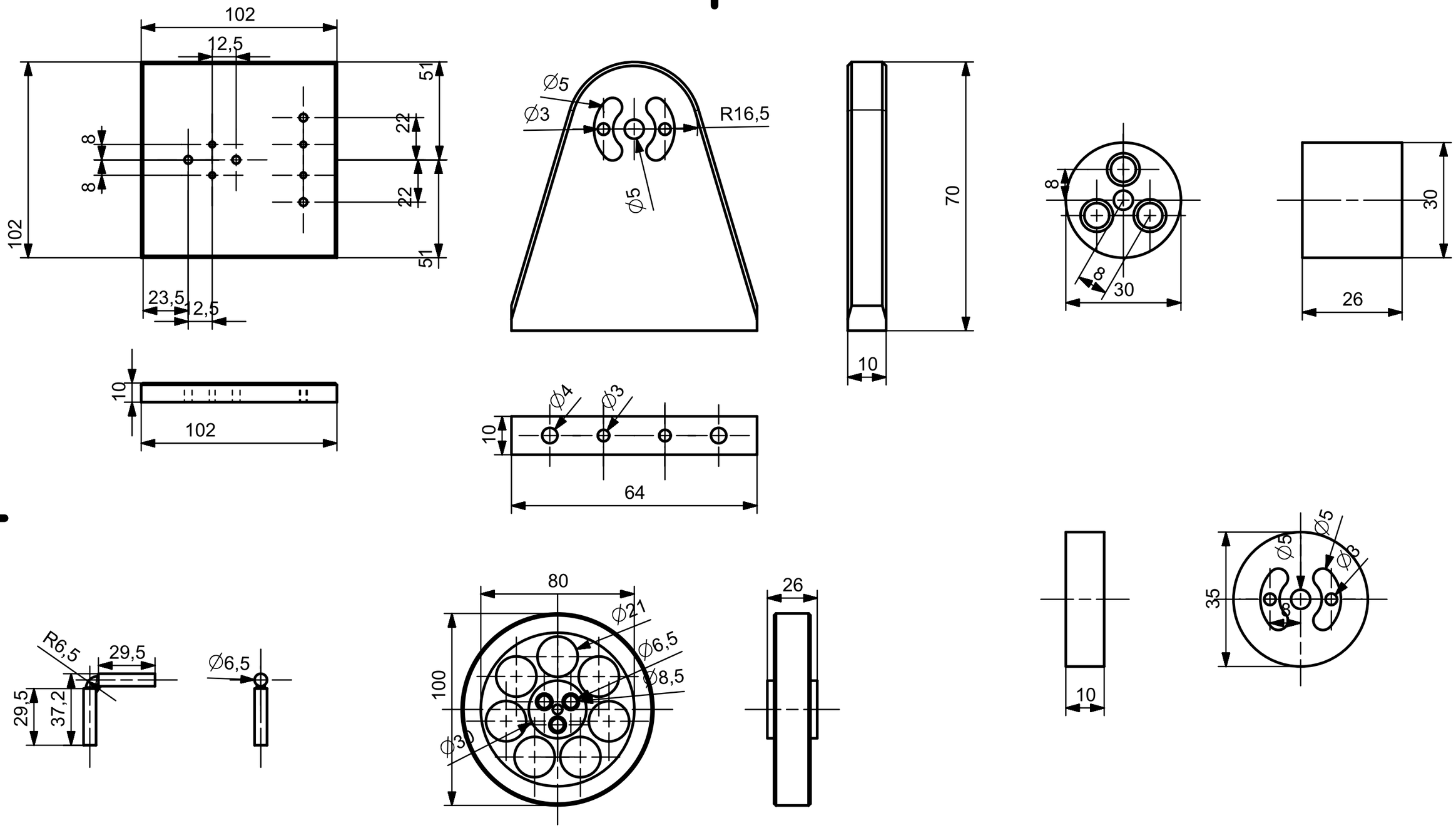

ALL DIMENSIONS IN MM

SIEMENS		THIS DRAWING HAS BEEN PRODUCED USING AN EXAMPLE TEMPLATE PROVIDED BY SIEMENS PLM SOFTWARE
FIRST ISSUED		TITLE
DRAWN BY		
CHECKED BY		
APPROVED BY		SIZE A3 / DRG NO. BASEPLATE _dwg1 / SHEET REV A
		SCALE 1:1 / SHEET 2 OF 2 / A3